BOTTOM CONN. DIAPHRAGM SEALED GLYCERINE FILLED CAPSULE PRESSURE GAUGE APG 1010

ALTOP

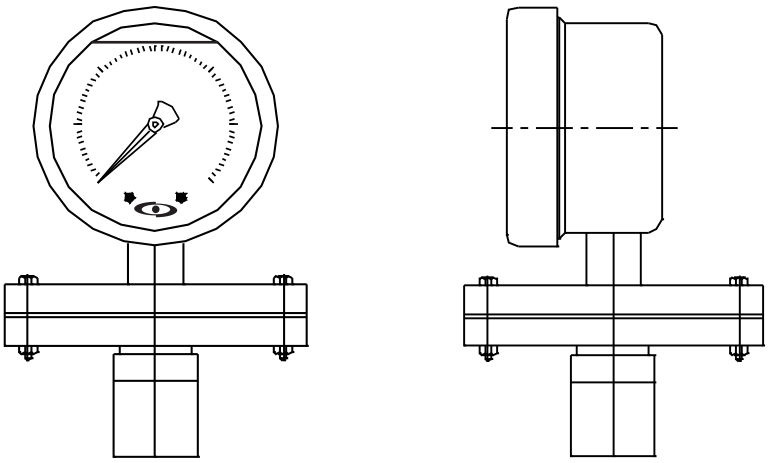

Dial Size	Case & Bezel	Mounting	Range	Connection	Pressure Element	Element M.O.C.	Movement	Accessories	Accuracy

04 100 mm
05 150 mm

01 Cast Aluminium
02 Screwed Type
03 SS 304 / 316
04 Bayonet Type / Press Type

01 Bottom Connection
Direct Mounting

01 3/8" BSP
02 3/8" NPT
03 ½" BSP
04 ½" NPT.
xx Others

06 Diaphragm

C1. Diaphragm Material
SS 316,
SS 316 With Teflon Coating
C2. Lower Chamber:
SS 304
SS 316,
PTFE Coating provided

SS 304

01 1%
02 1.6%
03 2%
04 2.5%

01 Syphon Pig tail type
02 Syphon "U" type
03 Snubber
04 Gauge Saver
05 Gauge Cock
06 Needle Valves
07 Manifolds
08 Pointer Puller
Pls. Specify MOC & Thread.

APG 1010											

Corporate & Mktg. Office : 165, G.I.D.C. Makarpura, Vadodara 390 010. **Tel. : +91 - 265 - 2643550, 2646021.**
■ **Fax : + 91 - 265 - 2641054** ■ E-mail : marketing@altopindustries.com

Factory : 392 , 419-A, GIDC, Makarpura, Vadodara - 390 010.
■ **Tel. : 0265-2658480** ■ E-mail : support@altopindustries.com

MUMBAI : 5, Turakhia Park Shopping Complex, Building No. 1, Next to Corporation Bank, M. G. Road, Kandivali (W), MUMBAI - 400 067. ■ **Tel. :** (022) 2806 6032 / 2806 6036 ■ **Fax :** (022) 2862 9113
■ **Email :** bombay@altopindustries.com

ALTOP Industries Ltd.
PROCESS CONTROL INSTRUMENTATION
CIN - U91110GJ1993PLC018831
http://www.altopindustries.com

An ISO 9001 : 2008 company

w.e.f. 08-07-14