MULTIPOINT RTD
FLAME PROOF ART 1001-A

ALTOP

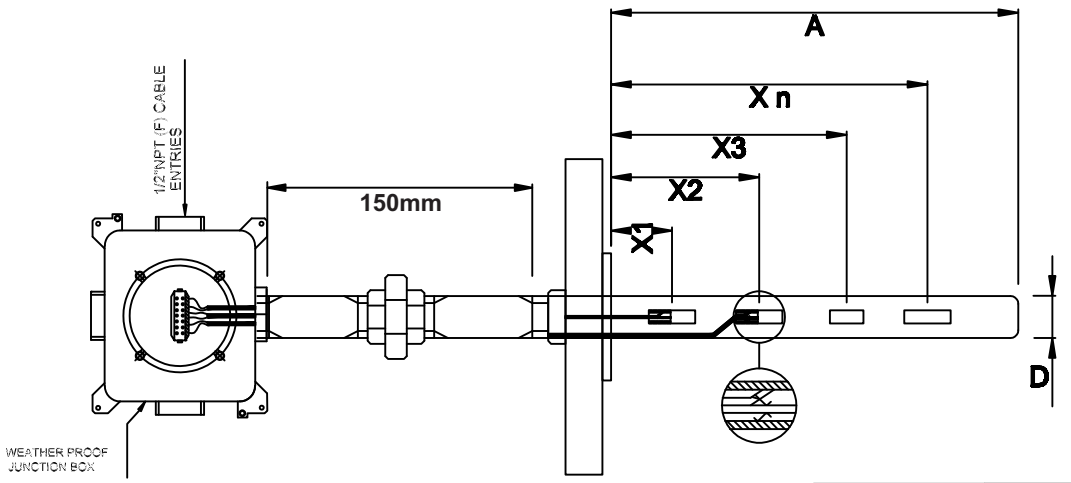

Head	Cable Gland	Lag Extension	"P" Process Connection Size	RTD	Accuracy

Material	No. of Entries	Cable Entries Size	Entries Plugged
B C. Alu. FLP-I/IIA/IIB C C. Alu. FLP-IIC X Others	1 Single Entry 2 Dual Entry	01 1/2" BSP 02 1/2" NPT xx Others	1 x None

O None
C FLP-1/IIA/IIB Double Compression Brass Ni Plated
D FLP-IIC Double Compression Brass Ni Plated
X Others

1 CS Nipple Union Nipple 150mm
2 SS 304 Nipple Union Nipple 150mm
3 SS 316 Nipple Union Nipple 150mm
x None

DIN 43760/IEC 751
A Class A
B Class B

DIA 3mm — DIA 5mm
DIA 5mm — DIA 6mm
Sheath Configuration

MOC

01	SS 304	05	SS 316 L
02	SS 304 L	13	Inconel 600
03	SS 310	xx	Others
04	SS 316		

SIZE

1A	1" ASA 150#
1B	1" ASA 300#
2A	1 1/2" ASA 150#
2B	1 1/2" ASA 300#
2C	1 1/2" ASA 600#
09	Others

FINISH

A	Serrated
B	Smooth

RTD Type	No. of Elements	Extension Configuration	Insulation	Sheath MOC	Sheath DIA	Sheath Length	Protection Sheath "D"	Protection Sheath Length "A"
PT-100 X Others	S Simplex D Duplex	A 2 Wire B 3 Wire C 4 Wire	01 Mineral Insulated	02 SS 316 xx Others	3 X 5 mm 5 X 6 mm	X1 _____mm X2 _____mm X3 _____mm Xn _____mm	1 1/2" SCH-40 2 3/4" SCH-40 3 1" SCH-40 X Others	_____ mm

ART 1001-A																	

Corporate & Mktg. Office : 165, G.I.D.C. Makarpura, Vadodara 390 010. **Tel. : +91 - 265 - 2643550, 2646021.**
■ **Fax : + 91 - 265 - 2641054** ■ E-mail : marketing@altopindustries.com

Factory : 392 , 419-A, GIDC, Makarpura, Vadodara - 390 010.
■ **Tel. : 0265-2658480** ■ E-mail : support@altopindustries.com

MUMBAI : 5, Turakhia Park, Shopping Complex, Building No. 1, Next to Corporation Bank, M. G. Road, Kandivali (W) MUMBAI - 400 067. ■ **Tel. :** (022) 2806 6032 / 2806 6036 ■ **Fax :** (022) 2862 9113
■ **Email :** bombay@altopindustries.com

ALTOP Industries Ltd.
PROCESS CONTROL INSTRUMENTATION
CIN - U91110GJ1993PLC018831
http://www.altopindustries.com

An ISO 9001 : 2008 company

w.e.f. 24-04-14