RTD WITH WEATHER PROOF ENCLOSURE & NIPPLE - UNION - NIPPLE ART 1003-B

ALTOP

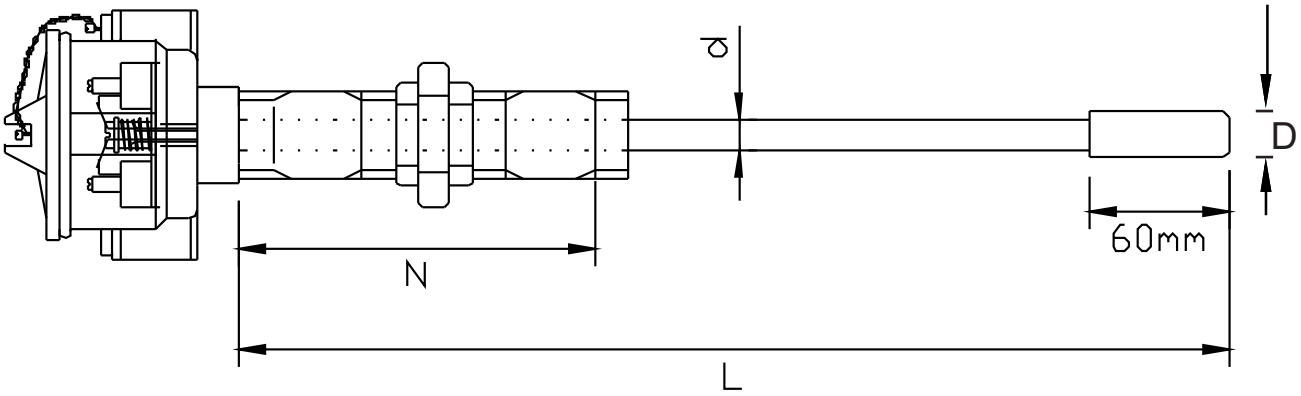

Head	Cable Gland	"N" Lag Extension	"P" Process Connection Size	RTD	Accuracy

Material	No. of Entries	Cable Entries Size	Entries Pluged
A C. Alu. WP D SS 304 WP G SS 316 WP	1 Single Entry 2 Dual Entry	01 3/4" ET 02 1/2" NPT xx Others	x None 1

O None
A W. P. Single Compression Brass Ni Plated
B W. P. Double Compression Brass Ni Plated
X Others

1 CS Nipple Union Nipple 150mm
2 SS 304 Nipple Union Nipple 150mm
3 SS 316 Nipple Union Nipple 150mm
x None

02 1/2" BSP
02A 1/2" NPT

DIN 43760/IEC 751
A Class A
B Class B

RTD Type	No. of Elements	Extension Configuration	Insulation	Sheath MOC	Sheath DIA	"L" Sheath Length
PT-100 X Others	S Simplex D Duplex	A 2 Wire B 3 Wire C 4 Wire	01 Mineral Insulated	04 SS 316 xx Others	1 Sheath of 5 mm OD with tip of 6 mm OD x 60 mm Length 2 Sheath of 6 mm OD with tip of 8 mm OD x 60 mm Length. X Others	_____mm

ART 1003-B														

An ISO 9001 : 2008 company

Corporate & Mktg. Office : 165, G.I.D.C. Makarpura, Vadodara 390 010. **Tel. : +91 - 265 - 2643550, 2646021.**
■ **Fax : + 91 - 265 - 2641054** ■ E-mail : marketing@altopindustries.com

Factory : 392 , 419-A, GIDC, Makarpura, Vadodara - 390 010.
■ **Tel. : 0265-2658480** ■ E-mail : support@altopindustries.com

MUMBAI : 5, Turakhia Park, Shopping Complex, Building No. 1, Next to Corporation Bank, M. G. Road, Kandivali (W) MUMBAI - 400 067. ■ **Tel. :** (022) 2806 6032 / 2806 6036 ■ **Fax :** (022) 2862 9113
■ **Email :** bombay@altopindustries.com

ALTOP Industries Ltd.
PROCESS CONTROL INSTRUMENTATION
CIN - U91110GJ1993PLC018831
http://www.altopindustries.com

w.e.f. 24-04-14