THERMOWELL SERIES ATW 1003-A

ALTOP

BAR STOCK THERMOWELL, DRILLED FROM HEX BAR (FULL TAPERED)

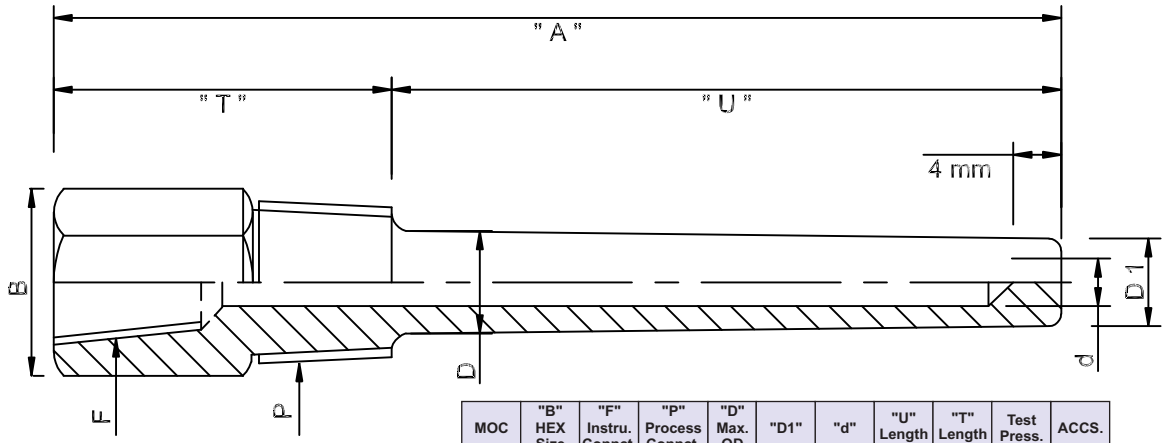

MOC	"B" HEX Size	"F" Instru. Connct.	"P" Process Connct.	"D" Max. OD	"D1"	"d"	"U" Length	"T" Length	Test Press.	ACCS.

01	SS 304	07	SS 347	14	Inconel 825	20	Titanium
02	SS 304 L	08	SS 347 H	15	Incolloy 800	22	Kanthal
03	SS 310	10	SS 410	16	Monel 400	23	Brass
04	SS 316	11	SS 446	17	Nickle 200	24	Copper
05	SS 316 L	12	CS A105	18	Hastalloy B	xx	Others
06	SS 321	13	Inconel 600	19	Hastalloy C-276		

01	1"	03	1 1/4"
02	1 1/8"	04	1 1/2"
		xx	Others

01	3/8" BSP	03	3/4" BSP
01A	3/8" NPT	03A	3/4" NPT
02	1/2" BSP	xx	Others
02A	1/2" NPT		

Female Thread

		MAX O.D.
01	3/8" BSP	12 mm
01A	3/8" NPT	12 mm
02	1/2"BSP	16 mm
02A	1/2" NPT	16 mm
03	3/4" BSP	21 mm
03A	3/4" NPT	21 mm
04	1" BSP	28 mm
04A	1" NPT	28 mm
04B	M 33 x 2	28 mm
xx	Other	Specify

Male Thread

16	16mm	xx	other
18	18mm		

07	7 mm	10	10 mm
08	8 mm	12	12 mm
09	9 mm	xx	Others

_____ mm

01 50 mm
xx Other

01 100 Kg/Cm²
xx Other

X None
01 Plug and Chain
02 Copper Washer
xx Others

ATW 1003-A											

Corporate & Mktg. Office : 165, G.I.D.C. Makarpura, Vadodara 390 010. **Tel. : +91 - 265 - 2643550, 2646021.**
■ **Fax : + 91 - 265 - 2641054** ■ E-mail : marketing@altopindustries.com

Factory : 392 , 419-A, GIDC, Makarpura, Vadodara - 390 010.
■ **Tel. : 0265-2658480** ■ E-mail : support@altopindustries.com

MUMBAI : 5, Turakhia Park, Shopping Complex, Building No. 1, Next to Corporation Bank, M. G. Road, Kandivali (W) MUMBAI - 400 067. ■ **Tel. :** (022) 2806 6032 / 2806 6036 ■ **Fax :** (022) 2862 9113
■ **Email :** bombay@altopindustries.com

ALTOP Industries Ltd.
PROCESS CONTROL INSTRUMENTATION
CIN - U91110GJ1993PLC018831
http://www.altopindustries.com

An ISO 9001 : 2008 company

w.e.f. : 05-07-2014