THERMOWELL SERIES ATW - 1005

ALTOP

BAR STOCK DRILLED FLANGED THERMOWELL (PARTIALY TAPPERED)

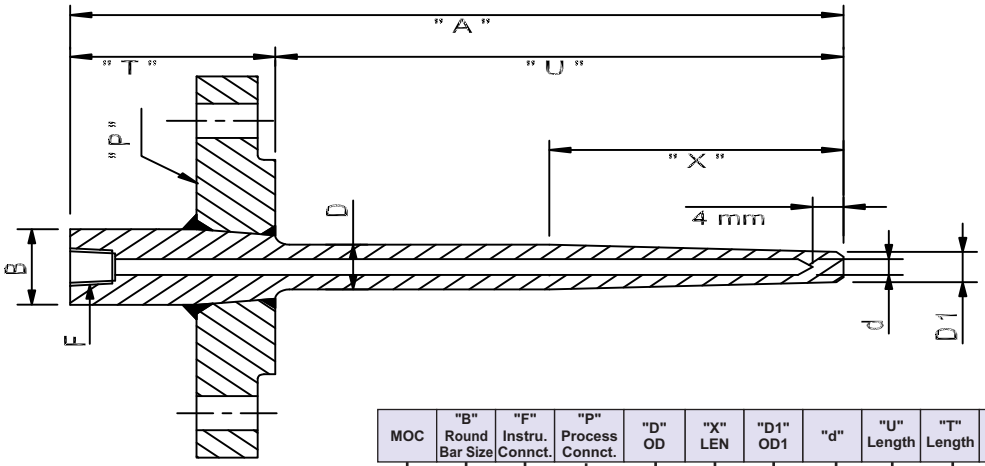

MOC	"B" Round Bar Size	"F" Instru. Connct.	"P" Process Connct.	"D" OD	"X" LEN	"D1" OD1	"d"	"U" Length	"T" Length	Test Press.	ACCS.

01	SS 304	07	SS 347	14	Inconel 825	20	Titanium
02	SS 304 L	08	SS 347 H	15	Incolloy 800	22	Kanthal
03	SS 310	10	SS 410	16	Monel 400	23	Brass
04	SS 316	11	SS 446	17	Nickle 200	24	Copper
05	SS 316 L	12	CS A105	18	Hastalloy B	xx	Others
06	SS 321	13	Inconel 600	19	Hastalloy C-276		

28	28 mm	34	34 mm
30	30 mm	xx	Others

01	3/8" BSP	03	3/4" BSP
01A	3/8" NPT	03A	3/4" NPT
02	1/2" BSP	xx	Others
02A	1/2" NPT		

Female Thread

MOC

01	SS 304	11	SS 446
02	SS 304 L	12	CS A105
03	SS 310	13	Inconel 600
04	SS 316	14	Inconel 825
05	SS 316 L	15	Incolloy 800
06	SS 321	16	Monel 400
07	SS 347	17	Nickle 200
08	SS 347 H	18	Hastalloy B
10	SS 410	19	Hastalloy C-276
		xx	Others

SIZE

1A	1" ASA 150#	3A	2" ASA 150#
1B	1" ASA 300#	3B	2" ASA 300#
1C	1" ASA 600#	3C	2" ASA 600#
2A	1 ½" ASA 150#	4A	1 ½" ASA 900# RTJ
2B	1 ½" ASA 300#	4B	1 ½" ASA 1500# RTJ
2C	1 ½" ASA 600#	4C	1 ½" ASA 2500# RTJ
2D	1 ½" ASA 900#	09	Others
2E	1 ½" ASA 1500#		
2F	1 ½" ASA 2500#		

FINISH

A	Serrated (RF)
B	Smooth (FF)
C	RTJ
xx	Others

01	
21 mm	
xx	
Others	
Specify	

16	16mm	xx	other
18	18mm		

01	150 mm
xx	Others

07	7 mm	10	10 mm
08	8 mm	12	12 mm
09	9 mm	xx	Others

_____ mm

01	50 mm
xx	Other

01	100 Kg/Cm²
xx	Other

X	None
01	Plug and Chain
02	Copper Washer
xx	Others

ATW 1005													

Corporate & Mktg. Office : 165, G.I.D.C. Makarpura, Vadodara 390 010. **Tel. : +91 - 265 - 2643550, 2646021.**
■ **Fax : + 91 - 265 - 2641054** ■ E-mail : marketing@altopindustries.com

Factory : 392 , 419-A, GIDC, Makarpura, Vadodara - 390 010.
■ **Tel. : 0265-2658480** ■ E-mail : support@altopindustries.com

MUMBAI : 5, Turakhia Park, Shopping Complex, Building No. 1, Next to Corporation Bank, M. G. Road, Kandivali (W) MUMBAI - 400 067. ■ **Tel. :** (022) 2806 6032 / 2806 6036 ■ **Fax :** (022) 2862 9113
■ **Email :** bombay@altopindustries.com

ALTOP Industries Ltd.
PROCESS CONTROL INSTRUMENTATION
CIN - U91110GJ1993PLC018831
http://www.altopindustries.com

An ISO 9001 : 2008 company

w.e.f. : 05-07-2014